Tkachuk V.P.,
Savytskyi Y.V.
Khmelnitskiy National University,
Khmelnitskiy, Ukraine
E-mail: tkachukv.p@gmail.com

THEORETICAL RESEARCH OF HORIZONTAL ROTOR MACHINE DYNAMICS

УДК 621

The rotor system on the example of washing machine with horizontal rotation axis is examined and theoretical research using linear oscillation theory is realized. The analysis of experimental results is realized and requirements for designing rotor machines with low vibroactivity are formulated.

Keywords: dynamics of rotor machines, washing-machine, vibro-activity.

Introduction

A washing machine as a research subject of dynamics in terms of reduction of vibration and noise represents a particular interest. This is because of permanent presence of accidental disbalances due to bedclothes and small parts of machines and equipment in the drum and due to low requirements for production precision and assembly of its parts and units in order to avoid possible increase in product cost.

Mathematical equations have been obtained in matrix form representing the oscillation of multi-linked tank-drum system attached on the elastic suspensions for main types of machines and ring type centrifuges with the horizontal and vertical axes of rotation. The objectives have been solved in linear manner by using equations of Lagrange of II type.

The investigation is based on the theoretical concepts of analysis of rotor systems described in [1 - 4].

Mathematical model of washing machines and the results of its investigation

Let us explore osciliations of elastic – suspended tank, having within hosing console – attached rotating unbalanced drum. Such layout is typical for machines with the horizontally – stated tank for bedclothes, for example as in “Viatka”, “LG F1222ND” and etc.

Specifications used for schematization of the research subject are such that real typical structure was changed by the calculation scheme (dynamical model), in which the absolutely rigid body (tank of mass m_1) is elastically connected with the block by optional number of thrusts and is capable to move in the space, having 6 degrees of freedom (Fig. 1). Within this body a chamber is arranged, in which the rotor (drum) rotates with the angular velocity ω, having mass m_2, resting on the absolutely rigid thrusts, situated within the same body.

As generalized coordinates, determining location of this system in the space, three Cartesian coordinates of the inertia centre of machine drum (axes a_1, b_1, c_1, representing the basic central axes) and three angles α, β, γ, setting rotations of these axes of coordinates relative to the motionless, connected with the case, coordinate axes X_1, Y_1, Z_1, or parallel to them axes X, Y, Z convergent in the centre of mass of the drum 0, in general case not laying on the rotation axis of the drum, are assumed.

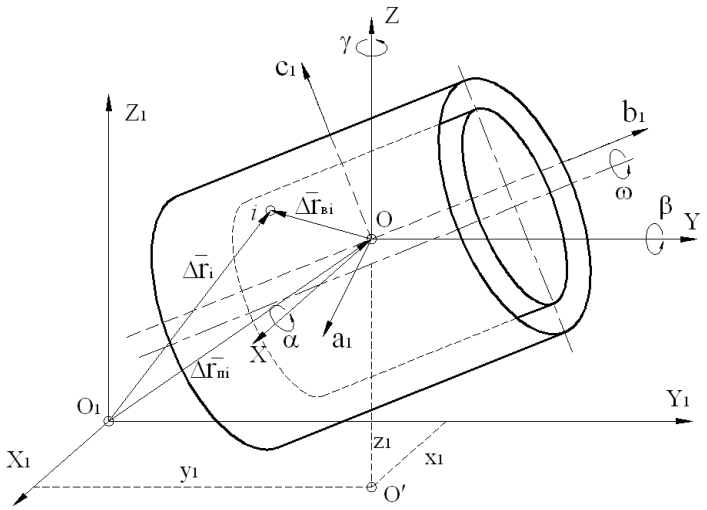

Fig. 1 – Calculation scheme

In such coordinate system oscillations can be represented like a superposition of six helical movements with the motionless axes of propellers X_1, Y_1, Z_1, and in general case the system of tank-drum performs six-link oscillations.

In order to compile differential equations of the system motion we will use the equations of Lagrange of the second type.

m_1 – mass of the tank;

$J_{a_1}^{(1)}$, $J_{b_1}^{(1)}$, $J_{c_1}^{(1)}$ – moments of inertia of the tank with respect to the basic central axes a_1, b_1, c_1 correspondingly;

m_2 – mass of the drum.

Kinetic energy of the tank-drum system can be computed as a sum:

$$T = T_1 + T_2, \tag{1}$$

where, $T_1 + T_2$– kinetic energies of the tank and drum, correspondingly.

Kinetic energy of the tank according to Konig's theorem [1] can be written as:

$$T_1 = \frac{1}{2}\cdot m_1\cdot(\dot{x}_1^2+\dot{y}_1^2+\dot{z}_1^2)+\frac{1}{2}\cdot J_{a1}^{(1)}\cdot\dot{\psi}_{a1}^2+\frac{1}{2}\cdot J_{b1}^{(1)}\cdot\dot{\psi}_{b1}^2+\frac{1}{2}\cdot J_{c1}^{(1)}\cdot\dot{\psi}_{c1}^2, \tag{2}$$

where $\dot{\Psi}_{a1}^2$, $\dot{\Psi}_{b1}^2$, $\dot{\Psi}_{c1}^2$ –projections of vector of angular velocity $\overline{\psi}=\overline{\alpha}+\overline{\beta}+\overline{\gamma}$ to the axes a_1, b_1, c_1.

In order to compile expression of the kinetic energy of the drum let us study its movement in general case (Fig. 2), when the centre of the drum mass in point S does not coincide with the centre of the tank masses at point O. Lets denote the eccentricity of the drum by a letter e.

Let us introduce into consideration extra coordinates of the system: performing the reciprocating motion X_2, Y_2, Z_2 with start at the point S and X_3, Y_3, Z_3 with start at the point D and firmly connected with the drum.

The coordinate axes a_2, b_2, c_2 are regarded as main central axes of the drum inertia.

The point of start for data registration D we obtain as a result of crossing of the rotation axis of the drum with a plane, passing through the centre of masses at the point S perpendicularly to the drum rotation axis. In the initial state and in the case of absence of the eccentricity $(e = 0)$ the point S coincides with the point D.

It is assumed that in the initial state the axes Y, Y_1, Y_2, Y_3 and b_1, b_2, b_3 are parallel to the axis of drum rotation.

In the considered system of coordinates the movement of the drum in general case can be presented as a complex motion: reciprocating movement with the centre of masses at the point S and rotation around this centre of mass with the angular velocity of $\overline{\Omega}=\overline{\dot{\psi}}+\overline{\omega}$.

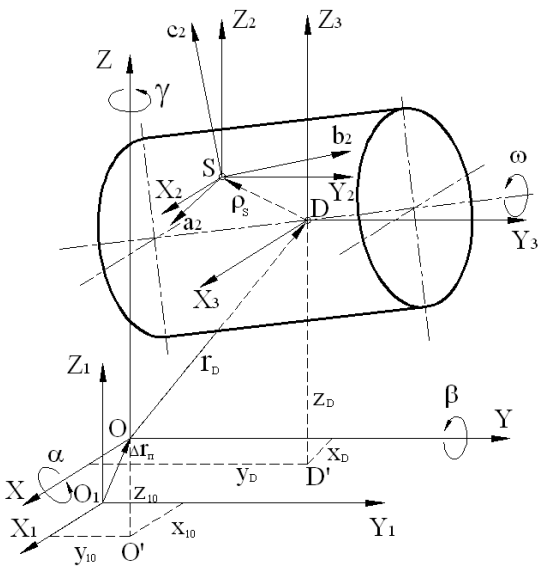

Fig. 2 – Movement of the drum in general case

By applying the theorem of Konig we can write the expression for the kinetic energy of the drum:

$$T_2 = \frac{1}{2} \cdot m_2 \cdot (V_{Sx1}^2 + V_{Sy1}^2 + V_{Sz1}^2) + \frac{1}{2} \cdot I_{a2}^{(2)} \cdot (\Omega_{a2}^2 + \Omega_{c2}^2) + \frac{1}{2} \cdot I_{b2}^{(2)} \cdot \Omega_{b2}^2. \quad (3)$$

Expression for the kinetic energy of the tank-drum system is as follows:

$$\begin{aligned} & T \frac{1}{2} m_1 \left(\dot{x}_1^2 + \dot{y}_1^2 + \dot{z}_1^2\right) + \frac{1}{2} I_{a1} \dot{\alpha}^2 + \frac{1}{2} I_{b1} \dot{\beta}^2 + \frac{1}{2} I_{c1} \dot{\gamma}^2 + \\ & m_2 \dot{x}_1 \left(\dot{\beta} z_D - \dot{\gamma} y_D + \omega e \cos \omega t\right) - m_2 \dot{\gamma} y_D \left(\dot{\beta} z_D + \omega e \cos \omega t\right) + \\ & m_2 \dot{\beta} \omega e \left(z_D \cos \omega t + x_D \sin \omega t\right) + m_2 \omega^2 e^2 \cos \omega t + \\ & m_2 \dot{y}_1 \left(\dot{\gamma} x_D - \dot{\alpha} z_D\right) - m_2 \dot{\gamma} \dot{\alpha} x_D z_D + \\ & m_2 \dot{z}_1 \left(\dot{\alpha} y_D - \dot{\beta} x_D - \omega e \sin \omega t\right) - m_2 \dot{\alpha} y_D \left(\dot{\beta} x_D + \omega e \sin \omega t\right) + \\ & \frac{1}{2} I_{b2}^{(2)} \omega \left(\omega + 2\left(\dot{\beta} + \alpha \dot{\gamma} - \dot{\alpha} \gamma\right)\right). \end{aligned} \quad (4)$$

Let us find the expressions for the potential energy and the energy dissipation within dampers of the tank-drum system.

The potential energy of oscillating tank-drum system is determined by elastic deformations of supports.

It is assumed that the tank-drum system is connected with the frame of washing-machine through n elastic elements and m dampers.

In order to simplify dependencies, let us assume that the principal axes of stiffness and constants of viscous friction of all elastic elements or dampers respectively are parallel to the main central axes of inertia of the tank-drum system.

Then projections of the stiffness vector of i-th elastic element to the coordinate axes X_1, Y_1, Z_1, which represent their main rigidities, will be C_{xi}, C_{yi}, C_{zi}, and for every i-th damper as projections of vector of constants of viscous friction are h_{xi}, h_{yi} and h_{zi}, moreover the latter also represent main constants of viscous friction. Such simplification practically is compatible with the structural composition of the elastic elements in existing washing-machines, and their other compositions do not promise any additional advantages.

Then the equation of potential energy of the tank-drum system will have the following expression:

$$\Pi = \frac{1}{2} \sum_{1}^{n} (C_{x_i} \Delta r_{x_{1i}}^2 + C_{y_i} \Delta r_{y_{1i}}^2 + C_{z_i} \Delta r_{z_{1i}}^2), \quad (5)$$

where $\Delta r_{x_{1i}}$, $\Delta r_{y_{1i}}$, $\Delta r_{z_{1i}}$ – movements along the axes X_1, Y_1, $Z_1$of fastening points relative to the movable system of elastic elements;

n – number of elastic elements of the tank-drum system.

Dissipation energy in the dampers due to action of viscous friction, which depends on the velocity of motion of the points, is as follows:

$$D = \frac{1}{2} \sum_{1}^{m} (h_{x_i} \Delta \dot{r}_{x_{1i}}^2 + h_{y_i} \Delta \dot{r}_{y_{1i}}^2 + h_{z_i} \Delta \dot{r}_{z_{1i}}^2), \quad (6)$$

where $\Delta \dot{r}_{x_{1i}}$, $\Delta \dot{r}_{y_{1i}}$, $\Delta \dot{r}_{z_{1i}}$ – velocities along the axes X_1, Y_1, $Z_1$of connection points of the dampers to the tank-drum system;

m – number of dampers in the tank-drum system.

Differential equations of oscillation of the tank-drum system will be obtained by applying equations of Langrage of II type and taking into account the dissipation of energy by assuming damping of Rayleigh type [2]:

$$\frac{d}{dt}\left(\frac{\partial T}{\partial \dot{q}_j}\right) - \frac{\partial T}{\partial q_j} + \frac{\partial \Pi}{\partial q_j} + \frac{\partial D}{\partial \dot{q}_j} = 0, \quad (7)$$

where j – number of generalized coordinates, which in this case is equal to 6.

By performing mathematical operations, which are prescribed by the equations of Lagrange (7) according to six generalized coordinates, i. e. X_1, Y_1, Z_1, α, β, γ, assuming that ω = const and by omitting indexes at X_1, Y_1, Z_1, we obtain a system of six differential equations:

$$1)\quad \begin{aligned} & m\ddot{x} + m_2\ddot{\beta}z_D - m_2\ddot{\gamma}y_D + x\sum_1^n c_{x_i} + \beta\sum_1^n c_{x_i}z_i - \gamma\sum_1^n c_{x_i}y_i + \\ & + \dot{x}\sum_1^m h_{x_i} + \dot{\beta}\sum_1^m h_{x_i}z_i - \dot{\gamma}\sum_1^m h_{x_i}y_i = m_2\omega^2 e\sin\omega t; \end{aligned}$$

$$2)\quad \begin{aligned} & m\ddot{y} - m_2\ddot{\alpha}z_D + m_2\ddot{\gamma}x_D + y\sum_1^n c_{y_i} - \alpha\sum_1^n c_{y_i}z_i + \gamma\sum_1^n c_{y_i}x_i + \\ & + \dot{y}\sum_1^m h_{y_i} - \dot{\alpha}\sum_1^m h_{y_i}z_i + \dot{\gamma}\sum_1^m h_{y_i}x_i = 0; \end{aligned}$$

$$3)\quad \begin{aligned} & m\ddot{z} + m_2\ddot{\alpha}y_D - m_2\ddot{\beta}x_D + z\sum_1^n c_{z_i} + \alpha\sum_1^n c_{z_i}y_i - \beta\sum_1^n c_{z_i}x_i + \\ & + \dot{z}\sum_1^m h_{z_i} + \dot{\alpha}\sum_1^m h_{z_i}y_i - \dot{\beta}\sum_1^m h_{z_i}x_i = m_2\omega^2 e\cos\omega t; \end{aligned}$$

$$4)\quad \begin{aligned} & J_{a_1}\ddot{\alpha} - m_2\ddot{y}z_D + m_2\ddot{z}y_D - m_2\ddot{\beta}y_Dx_D - m_2\ddot{\gamma}x_Dz_D - 2J_{в_2}^{(2)}\omega\dot{\gamma} - \\ & - y\sum_1^n c_{y_i}z_i + z\sum_1^n c_{z_i}y_i + \alpha\left(\sum_1^n c_{z_i}y_i^2 + \sum_1^n c_{Y_i}z_i^2\right) - \\ & - \beta\sum_1^n c_{z_i}x_iy_i - \gamma\sum_1^n c_{y_i}x_iy_i - \dot{y}\sum_1^m h_{y_i}z_i + \dot{z}\sum_1^m h_{z_i}y_i + \\ & + \dot{\alpha}\left(\sum_1^m h_{z_i}y_i^2 + \sum_1^m h_{y_i}z_i^2\right) - \dot{\beta}\sum_1^m h_{z_i}x_iy_i - \dot{\gamma}\sum_1^m h_{y_i}x_iy_i = m_2y_D\omega^2 e\cos\omega t; \end{aligned} \qquad (8)$$

$$5)\quad \begin{aligned} & J_{в_1}\ddot{\beta} + m_2\ddot{x}z_D - m_2\ddot{z}x_D - m_2\ddot{\alpha}y_Dx_D - m_2\ddot{\gamma}y_Dz_D + x\sum_1^n c_{x_i}z_i - z\sum_1^n c_{z_i}x_i - \\ & - \alpha\sum_1^n c_{z_i}y_ix_i + \beta\left(\sum_1^n c_{x_i}z_i^2 + \sum_1^n c_{z_i}x_i^2\right) - \gamma\sum_1^n c_{x_i}y_iz_i + \dot{x}\sum_1^m h_{x_i}z_i - \dot{z}\sum_1^m h_{z_i}y_i - \\ & + \dot{\alpha}\sum_1^m h_{z_i}y_ix_i + \dot{\beta}\left(\sum_1^m h_{x_i}z_i^2 + \sum_1^m h_{z_i}x_i^2\right) - \dot{\gamma}\sum_1^m h_{x_i}y_iz_i = \\ & = -m_2\omega^2 e(x_D\cos\omega t - z_D\sin\omega t); \end{aligned}$$

$$6)\quad \begin{aligned} & J_{c_1}\ddot{\gamma} - m_2\ddot{x}y_D + m_2\ddot{y}x_D - m_2\ddot{\alpha}x_Dz_D - m_2\ddot{\beta}y_Dz_D + 2J_{в_2}^{(2)}\omega\dot{\alpha} - \\ & - x\sum_1^n c_{x_i}y_i + y\sum_1^n c_{y_i}x_i - \alpha\sum_1^n c_{y_i}z_ix_i - \beta\sum_1^n c_{x_i}z_iy_i + \dot{\gamma}\left(\sum_1^n c_{y_i}x_i^2 + \sum_1^n c_{x_i}y_i^2\right) - \\ & - \dot{x}\sum_1^m h_{x_i}y_i + \dot{\gamma}\sum_1^m h_{y_i}x_i - \dot{\alpha}\sum_1^m h_{y_i}z_ix_i - \dot{\beta}\sum_1^m h_{x_i}z_ix_i + \dot{\gamma}\left(\sum_1^m h_{y_i}x_i^2 + \sum_1^m h_{x_i}y_i^2\right) = \\ & = -m_2\omega^2 ey_D\sin\omega t. \end{aligned}$$

Differential equations in matrix form are:

$$[M]\ddot{q}+([G]+[D])\dot{q}+[A]q=[Q], \tag{9}$$

where $[M]=\left\|P_{ij}\right\|_1^6$ – matrix of inertia coefficients;

$[G]=\left\|q_{ij}\right\|_1^6$ – matrix of gyroscopic coefficients;

$[D]=\left\|\alpha_{ij}\right\|_1^6$ – matrix of coefficients of damping;

$[A]=\left\|\alpha_{ij}\right\|_1^6$ – matrix of coefficients of rigidity;

$q=\{x, y, z, \alpha, \beta, \gamma\}^T$ – matrix-column of generalized coordinates;

$Q=\{Q_x, Q_y, Q_z, Q_\alpha, Q_\beta, Q_\gamma\}^T$ – matrix-column of generalized factors of forces.

Also the coefficients, for example, of the matrix A have the following expressions:

$$\begin{gathered}
a_{11}=\sum_{i=1}^{n}c_{x_i};\quad a_{15}=a_{51}=\sum_{i=1}^{n}c_{x_i}z_i;\quad a_{16}=a_{61}=-\sum_{i=1}^{n}c_{x_i}y_i;\\
a_{22}=\sum_{i=1}^{n}c_{y_i};\quad a_{25}=a_{52}=-\sum_{i=1}^{n}c_{y_i}z_i;\quad a_{26}=a_{62}=\sum_{i=1}^{n}c_{y_i}x_i;\\
a_{33}=\sum_{i=1}^{n}c_{z_i};\quad a_{34}=a_{43}=\sum_{i=1}^{n}c_{z_i}y_i;\quad a_{35}=a_{53}=-\sum_{i=1}^{n}c_{z_i}x_i;\\
a_{44}=\sum_{i=1}^{n}c_{z_i}y_i^2+\sum_{i=1}^{n}c_{y_i}z_i^2;\\
a_{45}=a_{54}=-\sum_{i=1}^{n}c_{z_i}x_iy_i;\quad a_{46}=a_{64}=-\sum_{i=1}^{n}c_{y_i}x_iz_i;\\
a_{55}=\sum_{i=1}^{n}c_{x_i}z_i^2+\sum_{i=1}^{n}c_{z_i}x_i^2;\quad a_{56}=a_{65}=-\sum_{i=1}^{n}c_{x_i}y_iz_i;\\
a_{66}=\sum_{i=1}^{n}c_{y_i}x_i^2+\sum_{i=1}^{n}c_{x_i}y_i^2;\quad a_{12}=a_{13}=a_{23}=a_{24}=a_{36}=0,
\end{gathered} \tag{10}$$

where $c_{x_i}, c_{y_i}, c_{z_i}$ – projections of the stiffness vector of the *i*-th elastic element to the coordinate axes X_1, Y_1, Z_1.

According to their structure elements a_{ij} of the matrix A can be divided into four groups and named analogously to the components of the inertia tensor. The first group comprises from elements a_{ij}, those which have $i, j \le 3$ and $i = j$. They represent summarized stiffness, values of which are essentially positive.

The second group includes elements a_{ij}, having $i, j > 3$ and $i = j$. They represent torsional rigidity of suspension of the tank-drum system. According to signs they are analogous to the inertia moments with respect to the coordinate axes, i. e. they are always positive.

The third group includes elements a_{ij}, having $i, j \le 3$ and $i \ne$ j. They represent static moments of stiffness with respect to coordinate planes of the system. According to signs they are analogous to the static moments of masses with respect to coordinate planes, i. e. they can be positive, negative and zero.

And, finally, the forth group includes elements $i, j > 3$, having $i \ne j$. They represent centrifugal moments of stiffness with respect to pairs of coordinate planes. According to signs they are analogous to the centrifugal moments of inertia, i. e. they сап be positive, negative and zero.

Such analogy enables to develop simple rules, at which the non-diagonal elements of the stiffness matrix - static and centrifugal moments of stiffness will become zero, which is necessary for separation of oscilla-

tions of the system. Particularly, static and centrifugal moments of stiffness will become zero, if coordinate planes with respect to which they have been determined, will be planes of symmetry of suspension of the tank-drum system. Analogous considerations remain valid about the structure of elements of the damping matrix D.

For complete separation of free oscillations (when the drum is not rotating) it is necessary, that besides of the stiffness matrix A, also the matrix of inertia coefficients M would have a diagonal form, that is possible in the case of coincidence of the center of mass of the tank and the centre of mass of the balanced drum.

However in practice because of random character of distribution of bedclothes within the drum it is impossible to obtain complete coincidence of center of mass of the tank and centre of mass of the balanced drum. However in order to reduce vibro-activity of the washing-machine it is essential to seek that the centre of mass of the tank would be on the axis of rotation of the drum and that they would be as much as possible closer to its centre of mass at uniform positioning of bedclothes.

The performed analysis of differential equations of motion allowed to formulate requirements concerning the structure of the washing-machine, which should be followed during the design stage: the centre of the tank mass must be on the axis of rotation of the drum; rotation axis of the drum must be the main central axis of drum inertia; centre of mass of the tank must coincide with the centre of mass of the drum; centre of stiffness of the system of elastic supports must coincide with the gravity centre of the tank, and the main axes of stiffness – with the main central axes of inertia of the tank. The main axes of constants of viscous friction must coincide with the main central axes of inertia of the tank.

The system of equations (9) has not only qualitative considered above solutions, but quantitative as well. Calculations performed concerning machines “Viatka” and “Volga” with an aim to determine resonances and provide their elimination, at the beginning by separation of oscillations through repositioning of masses and stiffness of the whole machine, and then – shifting of every single resonance through variation of masses and rigidities, influencing only on the meaning of this resonance, has confirmed correctness of requirements formulated for the design of machines having low vibro-activity.

However calculations are not always successful. And the matter here is not related with the incomplete schemes of calculations and improper equations of oscillations, but it is linked with the fact that looking only to the drawigs of the machine it is difficult to determine precisely exact values of the stiffness coefficients, damping, inertia and masses, that are included into the equations, which are to be adequate for the chosen scheme of calculations. Many elements of the machine one should consider at the same time as mass, and as stiffness, and as generator of oscillations (resonator), and as absorber (damper). At high amplitudes of oscillations some of the parts, that are rightly considered as being rigid under lower amplitudes, deform, involve into oscillation their adjacent elements, attaching to themselves a certain part of their mass and stiffness, i. e. they change the initial conditions of the problem and, subsequently, values of calculated shapes and frequencies of oscillations.

All together this requires the development of experimental methods and equipment for the research of machine dynamics in order to accelerate their adjustment, checking and correction of calculations, identification of parameters of masses, stiffness and damping, that are in the equations of operative search for the reasons of defects occurring and verification of the effectiveness of measures taken for their elimination.

Experimental setup and the results of experimental investigations

Experimental research was conducted directly on the natural objects during their exploitation by measuring noise, vibrations, forces in the supports and distributions of stresses within separate elements and units of the machine over the whole frequency range of rotation of the drum.

As an effective method to study dynamics of the machine, particularly for disclosing resonances of its units and parts, proved itself the research conducted on the setup for analysis of vibrations ВЭДС-200А. The machine has been mounted on the table of the setup for analysis of vibrations through transitional rigid foundation with a certain inclination, with an aim that the exciting force directed along the axis of the setup for analysis of vibrations would have the necessary components and would excite the tested machine in the vertical, horizontal and longitudinal planes (Fig. 3).

By slowly changing the excitation frequency of the setup the measurement systems clearly detected resonances of separate units and elements of the machine. It proved that some of the panels and braces of the machines “Evrika” and “Aisha” have their natural frequencies that do not coincide with the rotation frequencies of the drum, but coincide with the frequencies of rotation of the electrical motor, rolling bodies in the bearings, frequency of oscillations of the stator plates. Experimental research conducted on the setup for analysis of vibrations, despite its simplicity and absence of rotation, often have proved themselves as being not less effective than natural, because of convenience in monitoring, possibility of variation of values of excitation force and its frequency, as well as continuation of tests during piece by piece assembly of the machine.

The main reasons of vibration and noise have been disclosed for the investigated machines: unsuccessful arrangement of masses and stiffness, leading to high connectivity of oscillations, rezonance states of one or

several parts of the machine: tank, supporting brackets, panels, covers, walls, platforms, suspended aggregates, ballast weights, technological and exploitation disbalances of rotating parts, oversized bearings.

The effectiveness of developed methods and means used we illustrate on the basis of washing – wringing machine “Volga-11”.

Practical exploitation of such machines has shown that during wringing process of bedclothes so substantial twists of the drum occur that exceed allowable lash – limit between the drum and the tank and this leads to the switch of the blocking mechanism, which stops the operation of the machine.

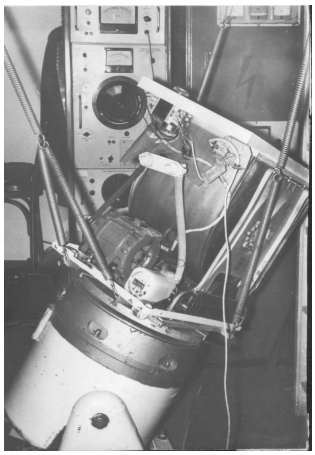

Fig. 3 – Machine on the setup for analysis of vibrations

At the beginning the calculation of the machine was carried out regarding oscillations by using carefully determined values of elastic – inertia and dissipation characteristics of elements and units, which are involved in the equation (9). As a result the spectrum, of 6 natural frequencies of oscillations was obtained, occurring within the range of 2,3 - 5,3 Hz, which is far enough from the operational frequency of rotation of the drum. In spite of this, due to deviation from the requirements presented above concerning the structure of the machine, highly connected oscillations were obtained. This, as well as nearness of natural frequencies, makes it impossible at unsuccessful positioning of bedclothes to achieve the wringing performance mode and the amplitude of oscillations of the upper edge of the drum exceeds 25 mm under disbalance of 7500 g·cm. In such conditions even automatic balancing equipment was not effective enough.

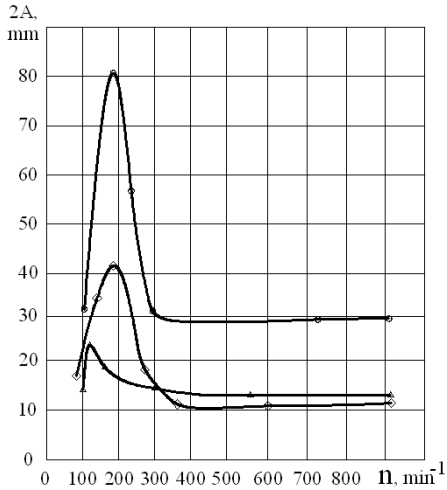

Fig. 4 – Amplitude-frequency characteristics of “Volga-11”

In order to diminish vibrations of this machine the following means have been implemented: in order to achieve coincidence of the centre of masses of the platform with the axis of rotation of the drum the counterweight of mass 3 kg was attached on it; in order to equalize the stiffness of the suspension elements the spring of a single rigidity equal to 2,4 kN was used within them; finally the tightening corrugated rubber diaphragm was replaced by a conical one, produced from rubber type material, which practically does not have bending stiffness. These measures have led to reduction of all 6 natural frequencies of vibrations, which now are located in the range of 1,4 - 3,7 Hz, as well as of amplitudes of forced oscillations and noise. For further reduction of oscil-

lations the serial liquid Automatic Balancing Equipment (ABE) was changed into combined liquid – spherical one having a higher energetic capacity. In general the efficiency of all measures introduced is illustrated by amplitude – frequency characteristics of the machine with disbalance of 9500 g·cm (Fig. 4), taken for serial variant, as well as after reassembly and mounting of a new auto-balancer, where one сап monitor, that these measures enabled to reduce vibrations at resonance by 4 times. Implementation of the named measures with reserve assures non-stop operation of the machine up to wringing performance mode.

Theoretically obtained and experimentally verified main requirements for the structure of washing-machines have proved themselves useful in practical applications. They are being evident and, from our point of view, could be considered for application in the design of other types of rotor machines.

The obtained mathematical model proved useful for investigation of rotor machines. On the basis of investigations of this model a number of recommendations for the design of washing machines were provided.

Experimental investigations on a special setup for analysis of vibrations were performed. They confirmed the recommendations obtained from the analysis of the mathematical model of the washing machines.

References

1. Dimentberg F. M. Oscillations of Machines / F. M. Dimentberg, К. Т. Shatalov, A. A. Gusarov. – Moscow: Mashinostrojenije, 1964. – P. 256-29I.

2. Pars L. A. Analytio Dynamics. – Moscow: Nauka, – 1971. – 636 p.

3. V. Royzman, A. Bubulis, I. Drach, "System Analysis of Automatic Balancing (Self-Balancing) Machine Rotors with Liquid Working Bodies", Solid State Phenomena, Vols. 147-149, pp. 374-379, 2009.

4. Royzman, V., Drach, I., Bubulis, A. Movement of working fluid in the field of centrifugal forces and forces of weight 21st International Scientific Conference: Mechanika 2016 – Proceedings.

Поступила в редакцію 16.12.2016

Ткачук В.П., Савицький Ю.В. **Теоретичні дослідження динаміки горизонтальних роторних машин.**

Розглянуто роторну систему на прикладі пральної машини з горизонтальною віссю обертання та проведено теоретичні дослідження з використанням лінійної теорії коливань. Виконано аналіз результатів досліджень та сформульовано вимоги для проектування роторних машин з низькою віброактивністю.

Ключові слова: динаміка роторних машин, пральна машина, віброактивність.