ARCHIVES OF ACOUSTICS
14, 3–4, 161–172 (1989)

AN ULTRASONIC CALORIMETER FOR PROPAGATION PARAMETER MEASUREMENT

R. C. CHIVERS

Department of Physics, University of Surrey, Guilford, Surrey GU2 5XH

S. REANTRAGOON

Department of Medical Physics, Leeds General Infirmary, Leeds

The theory of an ultrasonic calorimeter is outlined which shows that the device may be used to measure attenuation in penetrable media. With an auxiliary radiation force device the calorimeter can be used in principle to separate the absorption part of the attenuation in inhomogeneous media such as biological tissues.

The design of a practical system is described and test measurements reported. The critical features are seen to be the thermocouple probes, the digitization circuitry, and the geometry of the design.

1. Introduction

Ultrasonic calorimetry has received continued attention in the literature following the early work of Wells et al., [27]. Lloyd [15] provided a valuable review and a useful classification of calorimetric approaches, although subsequent developments have rendered it incomplete. The analytical basis of ultrasonic calorimetry was provided by Zieniuk and Evans [28] who extended the range of usefulness of such devices by removing the need for the calorimeter to be thermally isolated from its surroundings.

The main concern of these, and subsequent authors, has been to construct devices to measure the total acoustic power of an irradiating sound field. Attention has focussed on the low megahertz frequency range because of the great biomedical interest at these frequencies (Wells [26]). The technique is of particular value at high irradiating power levels because of its insensitivity, in principle, to the effects of cavitation and non-linearity in the sound field (Zieniuk and Chivers [29]). Devices have been reported which will measure the low (milliwatt) mean power levels used in diagnostic devices (e.g. Torr and Watmough [25]) but they do not appear to have found popular application.

The present work emerged from an idea of the late Professor Roy ELLIS of using a calorimeter to measure that component of the effective ultrasonic irradiation of a system that can correctly be compared with the concept of dose in ionising radiation. The majority of the measurement techniques that are in current use, such as miniature hydrophones (PRESTON et al. [20]; LEWIN [14]) or radiation force balances (FARMERY and WHITTINGHAM, [11]; ANSON and CHIVERS [3], measure ultrasonic field parameters in water. They are thus even one stage removed from the measurement of exposure. The calculation of the field parameters at a given site then requires knowledge of the ultrasonic propagation parameters, specifically velocity and absorption or attenuation, of the biological medium between the transducer (whose field pattern is known in water) and the site of interest, and an appropriate propagation equation. This inter-relationship between the measurement of exposure and knowledge of the ultrasonic propagation parameters of the medium will be discussed in more detail in a subsequent section.

The device described here was designed to be used to measure the propagation parameters of an inhomogeneous medium such as biological tissue, suspensions, or oceanic sediments. The interest was in measuring the absorption and the attenuation on the same specimen at the same time. (For an inhomogeneous medium the difference between them is the contribution of the scattering to the attenuation). The magnitude of the scattering contribution to the attenuation in soft tissues is a matter of some discussion. Direct measurement of scattering estimates it as 2% (CAMPBELL and WAAG [5]) or as much as 13% (NASSIRI and HILL [17]) of the attenuation. If it is significant, it may compromise the value of both attenuation and scattering measurements made with conventional plane wave measurement approaches (CHIVERS [7]). Measurements of absorption have been made directly (PARKER [18, 19]) but the lack of simultaneous attenuation measurements introduces the non-negligible factor of biological variation into the error bars, thus effectively preventing accurate assessment of the (potentially small) difference between attenuation and absorption.

The paper presents the analytical basis of the device and the design considerations that constrain the form of its experimental realisation for a given application. An example of such a device is discussed in detail both in terms of its mechanical construction and the associated electronics. Some results on a known medium – castor oil – and on beef muscle are presented, as test procedures. The device is shown to be adequate for measurement of the attenuation but the separation of the scattering component will require improved instrumentation and a full error analysis.

2. Theoretical basis

The plane wave model assumed is illustrated in Fig. 1. The calorimeter is assumed to consist of a chamber of length l. Inserted into it a distance y from each end are thermocouple detectors (they need not be symmetrically arranged but the amend-

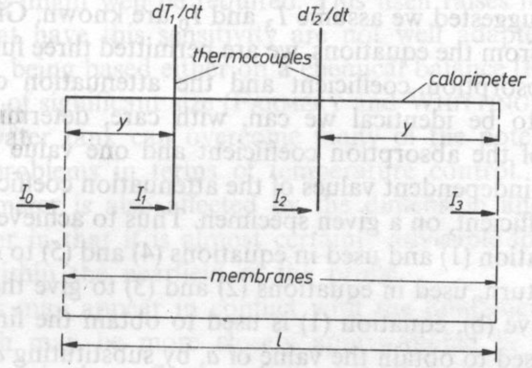

Fig. 1. Basic theoretical model

ment to the theory is trivial). The intensities of the ultrasonic waves entering the calorimeter, impinging on thermocouple 1, impinging on thermocouple 2, and leaving the calorimeter are I_0, I_1, I_2, and I_3, respectively. The temperatures registered by the thermocouples are designated by T_1 and T_2, so that:

$$\left[\frac{dT_1}{dt}\right]_0$$

represents the initial temporal gradient of temperature registered by the first thermocouple.

It is assumed that the medium inside the calorimeter is inhomogeneous but uniformly so, such that it is possible to specify a single ultrasonic absorption coefficient, a, and a single attenuation coefficient a_t which characterise the medium and are, in general, different. It is further assumed that I_0 and I_3 are known (since they can be measured either with a calibrated hydrophone (e.g. Preston et al., [20]) or by a radiation force device (e.g. Anson and Chivers, [3]). The equations describing the behaviour of the calorimeter are then:

$$I_3 = I_0\exp(-a_t l), \tag{1}$$

$$\left[\frac{dT_1}{dt}\right]_0 = aI_1/\varrho C, \tag{2}$$

$$\left[\frac{dT_2}{dt}\right]_0 = aI_2/\varrho C, \tag{3}$$

$$I_i = I_0\exp(-a_t y), \tag{4}$$

$$I_2 = I_0\exp(-a_t(x+y)), \tag{5}$$

where the $I_i (i = 0, 1, 2, 3)$, a, a_t, x, y, T_1 and T_2 have been defined above, and ϱ and C are the density and specific heat capacity of the medium respectively. Equations (2) and (3) are from Fry and Fry [12].

In the approach suggested we assume I_3 and I_0 are known. Given that I_1 and I_2 are to be determined from the equations, we are permitted three further unknowns. If the values of the absorption coefficient and the attenuation coefficient are not considered a priori to be identical we can, with care, determine either: (a) two independent values of the absorption coefficient and one value of the attenuation coefficient, or (b) two independent values of the attenuation coefficient and one value of the absorption coefficient, on a given specimen. Thus to achieve (a), the value of a_t is obtained from equation (1) and used in equations (4) and (5) to obtain values of I_1 and I_2 which are, in turn, used in equations (2) and (3) to give the two independent values of a. To achieve (b), equation (1) is used to obtain the first value of a_t, and equation (2) (or (3)) used to obtain the value of a, by substituting a_t into equation (4) (or (5)) and obtaining I_1 (or I_2). Inserting this value of a into equation (3) (or (2)) permits I_2 (or I_1) to be obtained, which can then be used in equation (5) (or (4)) to obtain the second value of a_t.

It is interesting to consider the case in which the medium inside the calorimeter is homogeneous so that $a_t = a$. The ratio of equations (2) and (3) gives:

$$\left[\frac{dT_1}{dt}\right]_0 \Big| \left[\frac{dT_2}{dt}\right]_0 = \frac{I_1}{I_2} = I_1 \exp(-ax) \tag{6}$$

so that if:

$$\frac{dT_1}{dt} \quad \text{or} \quad \frac{dT_2}{dt}$$

is measured we can determine I_0 from equation (4) or (5) as:

$$I_0 = \exp(ay) I_i = \left[\frac{dT_1}{dt}\right]_0 \frac{\varrho C \exp(ay)}{a} \tag{7}$$

(with a similar result using I_2), so that the calorimeter may be used to measure exposure in the conventional way. A rather fuller discussion of the significance of this has been given elsewhere (REANTRAGOON and CHIVERS [21]).

3. Numerical constraints

The practical implementation of a device based on the principles outlined in the previous section has implicit in it a number of limitations. These are essentially related to the dimensions of the calorimeter, i.e. its length and diameter, and of the positioning of the thermocouples within it. The first of these, the maximum length that is acceptable, is determined by the overall attenuation of the material in the calorimeter. The incident intensity I_0 has to be sufficiently low to avoid the complication of non-linear effects. If the output intensity is also to be measured, the overall attenuation should not place it too close to the threshold of sensitivity of the radiation force balance available. With a radiation force in water of 67mg per watt, a sensitivity of 100μg might well be required. This itself raises important problems since the devices that have this sensitivity are not well adapted for an auxiliary measurement role – being based either on a chemical balance (ROONEY [23]) or on a self-contained unit of significant size (FARMERY and WHITTINGHAM [11]). The use of a large enough water tank can overcome many of the potential problems but introduces greater problems in terms of temperature control. The choice of the length of the calorimeter is also affected by the dimension and frequency of the irradiating transducer in that it is almost certainly advisable for the whole of the calorimeter to lie within the nearfield of the probe.

At first sight this may appear in conflict with the fundamental assumption of a plane wave, which may be more closely approximated in the far-field. It is, however, crucial, not only that reflections from the side walls of the calorimeter due to beam divergence are avoided, but also that the radiation force device at the exit of the calorimeter can intercept all the beam, without too much divergence to cause inaccuracy in the measurement. There is some pressure to reduce the size of the sample as much as is reasonably possible because of the relative difficulty in obtaining large tissue specimens. The decision to keep the calorimeter in the near field of the transducer is therefore a compromise. However, the condition of a „plane wave" given above is not the usual interpretation. Equations (1)–(5) indicate that the 'plane wave' assumption is not that of a uniform pressure amplitude and phase across the beam, but of a uniform (vector) intensity. To the authors' knowledge this is a topic which still requires calculation but, from consideration of the conservation of energy, it is likely to be a good first approximation in the near field. It is known to be invalid in the far-field. The diameter of the calorimeter is thus controlled by the diameter of the irradiating transducer.

The spacing of the thermocouples is firstly determined by the need to have them sufficiently far from the ends of the specimen for there to be no thermal anisotropy in their environment. The first thermocouple can, subject to this restriction, be close to the entry port of the calorimeter where the intensity is highest and the temporal gradient of the rise in temperature (Equation (4)) high. The position of the second thermocouple is determined by a compromise between having a high temperature gradient, and the need for the temperature rise to be very different from that of the first thermocouple. The second aspect arises from the use of the ratio of equations (4) and (5) to obtain the attenuation coefficient.

For an intensity of $100 \mathrm{mWcm}^{-2}$ the temperature gradient for tissue (using the values of specific heat capacity given by SHITZER [24] and a value of the absorption coefficient of 0.1 nepers/cm (WELLS, [26]) is of the order of 3 millidegrees Kelvin per second at 1MHz. The temperature gradient increases with frequency as the absorption coefficient increases. This has significance in connection with the electronics discussed in section 4.3 below.

Two further considerations are relevant. The thermocouples have to be small compared to the wavelength. This only presents problems at frequencies of several tens of megahertz and above since commercially available thermocouples are available as small as 13μm. The last consideration is the distance between the exit port of the calorimeter and the target on the radiation force balance. Most radiation force devices use a self-centering concave conical target. It is important not only to have the whole of the ultrasonic beam impinging on the target, but the target itself must be sufficently far away to prevent energy reflected from the target reentering the calorimeter, or being reflected by the calorimeter back onto the target. It can be seen that for a calorimeter of radius R with an axial ultrasonic beam of radius r the spacing between the calorimeter and the vertex of the inverted conical target is given by

$$z > -(r+R)\cot 2\theta$$

where θ is the semi angle of the cone. θ has to be greater than 45° to prevent rays reflected from the target hitting it again. Thus 2θ is always obtuse and $\cot 2\theta$ always negative.

4. Experimental arrangement

The experimental arrangement is shown in Fig. 2 (schematic) and Fig. 3. A rectangular platform of perspex (*A*) had fitted above its centre a collar (*B*) (with three pairs of screws) for holding the irradiating transducer. This platform could be raised and lowered with respect to the bottom of the immersion tank by two rods (*C*)

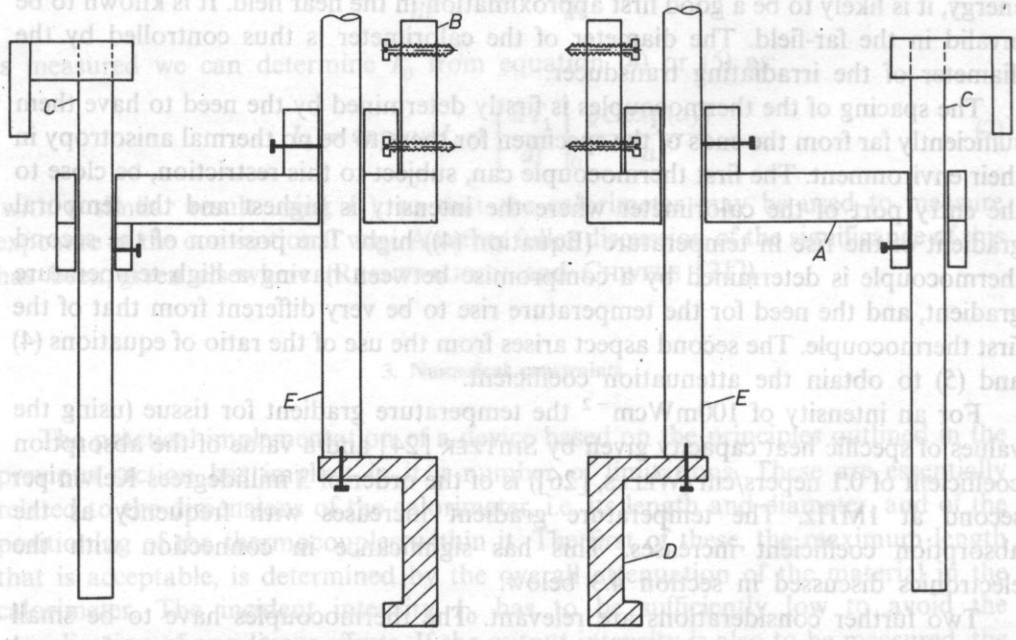

Fig. 2. Overall experimental arrangement: A – adjustable platform, B – transducer holder, C – rods for adjusting platform height, D – calorimeter, E – rods for adjustment of height of calorimeter

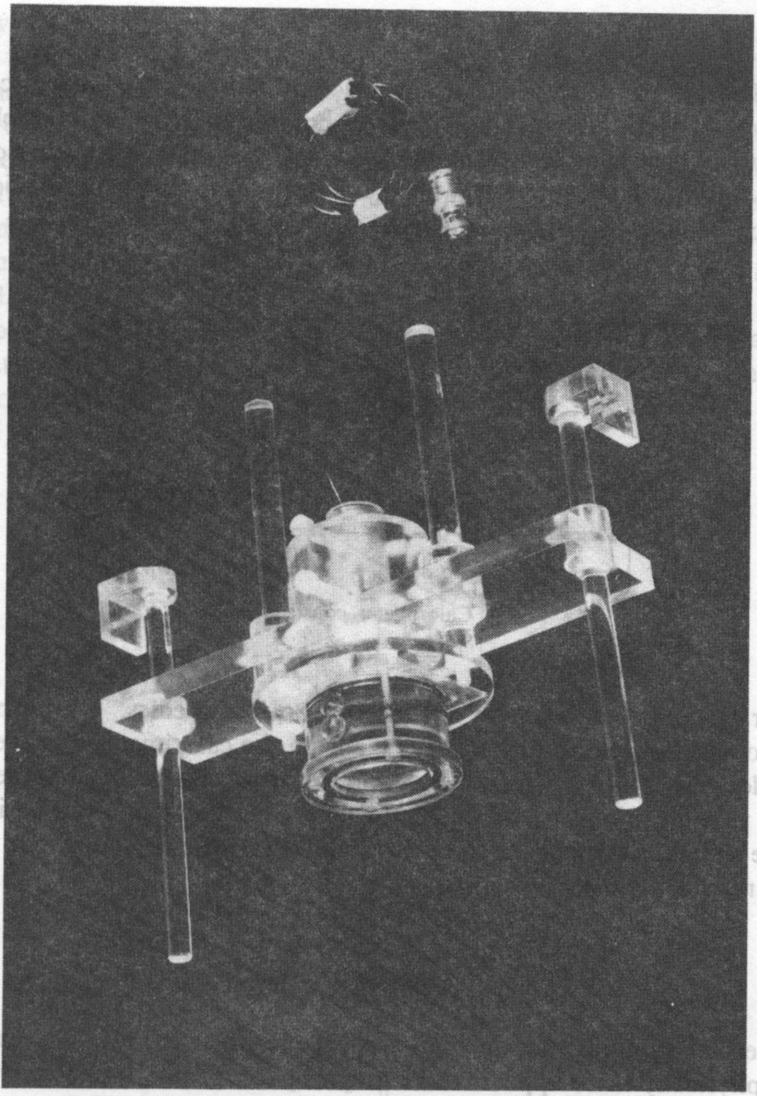

Fig. 3. Actual experimental construction

suspended from the top of the tank walls. The calorimeter (*D*) was attached to the platform by two rods (*E*) that also permitted its depth with respect to the platform to be varied. Below the calorimeter was the target of the radiation force device.

The tank in which the calorimeter and radiation force balance was immersed consisted of a thin-walled transparent tank within a larger tank (AINDOW [1]) with stirrer and thermostat control. The radiation force device was a novel design developed in the laboratory. It had a sensitivity of 40μW/mA and the inverted conical target (half angle 60°) stood about 10cm from the floor of the tank.

4.1. Calorimeter design

A detailed diagram of the calorimeter construction is shown in Fig. 4. It consists of a cylinder with two end plates. The end plates hold acoustic windows in place (5μm polythene) with 'o' rings to seal the specimen in the calorimeter. At one side are the entry ports for the thermocouples which are introduced via hypodermic needles. Each port contains a thin rubber mebrane held in place by a plug. The plug and calorimeter have aligned holes for the insertion of the needles. The purpose of the rubber is to act as a seal to prevent leakage from the calorimeter specimen volume. The basic design permits the introduction of cylindrical chambers of different lengths and entry port positions to be used. For the experimental investigation of the method the chamber was chosen to be 3cm long with the entry ports 1cm from each end. The internal diameter was 4cm.

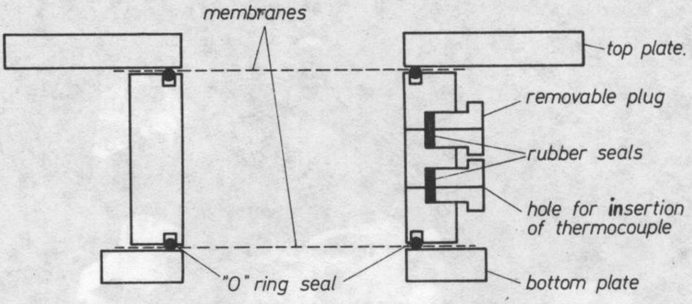

Fig. 4. Calorimeter construction

4.2. Sensors and circuitry

Chrome: constantan thermocouples were constructed for the experiments. Although physically there appears to be ample space for two insulated wires within a 31 gauge needle, the mechanical weakness of the wires is insufficient to overcome the frictional forces encountered. A local thermocouple manufacturer confirmed our inability to pass two wires down the needle. Finally one wire was taken outside and one inside – with appropriate varnish insulation. The thermocouples were tested for linearity (59μV per degree K) and inserted into the calorimeter using a 23 gauge needle.

Three types of circuitry are used in the system. The first is that for the radiation force device (which is described elsewhere; Anson et al [2]). The second is that for the transmitter excitation which was a standard variable frequency, variable length toneburst generation system. Pulses of typically 20 cycles every ms were used. The third type of circuitry was that for logging the temporal variation of the temperature measured by the two thermocouples. The circuitry used for this last is shown in Fig. 5. The termocouples are connected to high gain operational amplifiers and receive further amplification before being fed to a 12-bit ADC for processing by a Motorola 6809 system. Only one ADC was available so an analogue switch was used. The temperature gradients are typically higher in the initial phases and gradually flatten out. The main interest however is in the initial stages where the conflicting interests of low signal levels and high required sampling rates exist. In order to reduce the high frequency noise, a low pass (Sallen and Key) active filter was incorporated. The ADC used (ICL 7109) was an integrating ADC with an integration period of 40ms which was chosen also for its noise rejection capability. The temperature: time curves were extrapolated to obtain the initial (i.e. in the first second or so) temperature gradients.

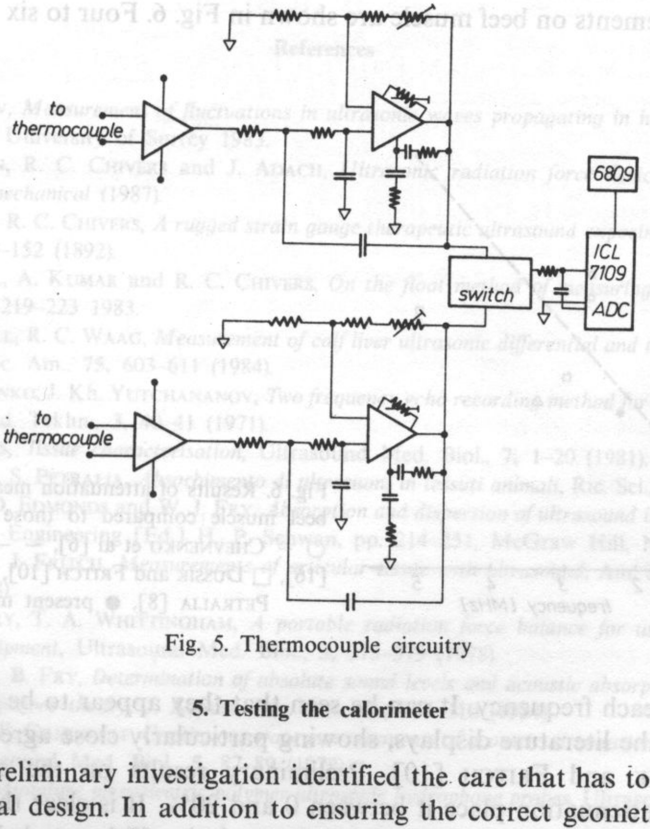

Fig. 5. Thermocouple circuitry

5. Testing the calorimeter

An extensive preliminary investigation identified the care that has to be taken with the experimental design. In addition to ensuring the correct geometry to keep the radiation force target within the near field of the transducer and to obtain high enough temperature rises on the thermocouples to provide a satisfactory signal to noise ratio, particular attention needs to be paid to the avoidance of non-linearity in the irradiating transducers as the exciting voltage is increased to improve the signal levels.

The preparation of the specimen had to ensure the removal of air-bubbles – the major reason for the use of transparent materials in the calorimeter construction. The tissues specimens used were fresh beef muscle (perpendicular to the fibres) cut to fit the calorimeter by a specially devised apparatus (Reantragoon and Chivers [22]). The thermocouples were then inserted into the tissue using hypodermic needles (see section 4.1.). Measurements were carried out on castor oil at 37° and the fresh beef muscle at 20° at mean power levels up to 500mW. The radiation force balance measurements are relatively well established so the calorimeter was tested by measuring the attenuation coefficient of the material in the holder using the two temperature gradients. On castor oil, results of 0.27 ± 0.03 $dBcm^{-1}$ and 0.70 ± 0.20 $dBcm^{-1}$ were obtained at 1.0 and 2.25 MHz respectively. These fit reasonably with the data of Dunn et al [9] and Fyke et al. [13]. The former authors give 0.174 $dBcm^{-1}$ (Fyke et al., giving 0.30 $dBcm^{-1}$) at 1 MHz and 0.67 $dBcm^{-1}$ at 2.25 MHz. The variation in the literature values is clearly not helpful here.

The measurements on beef muscle are shown in Fig. 6. Four to six measurements were taken at each frequency. It can be seen that they appear to be well within the range of data the literature displays, showing particularly close agreement with the data of Dussik and Fritch [10]. Preliminary results on the contribution of absorption to attenuation place it between 0 and 20%. It is clear that before more reliable figures can be provided, careful error analysis will be needed, together with procedures refined to reduce the error bars. Being a quasi-continuous wave device, there is the chance possibility of the thermocouples hitting axial minima. One of the important parameters to vary (slightly) is thus the distance of the calorimeter from the transducer if a reliable set of results is required.

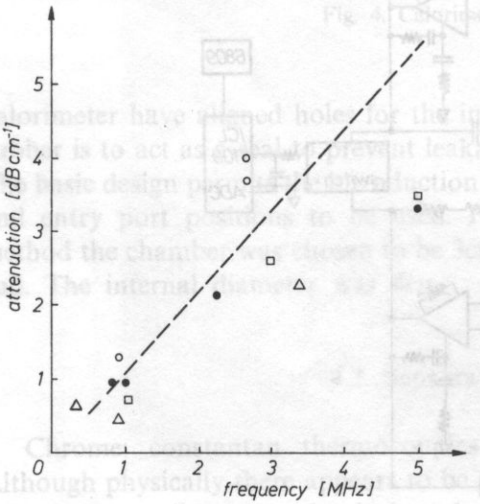

Fig. 6. Results of attenuation measurement of fresh beef muscle compared to those in the literature: ○ – Chevnenko et al [6], – – – Nassiri et al, [16], □ Dussik and Fritch [10], △ Colombati and Petralia [8], ● present measurements

5. Conclusion

The calorimeter described has a number of potential applications ranging from the simple measurement of attenuation in penetrable media such as liquids, to the separation of the absorption contribution to the attenuation on inhomogeneous materials, and the measurement of 'dose' (albeit in a very limited sense) in biological materials. The investigations reported here were restricted by the equipment available although the device is clearly suitable for attenuation and dose rate measurement. However with attention to the manufacture of reliable thermocouple probes, to the digitization procedures and the geometrical design of the calorimeter, the device would appear to be a useful adjunct to the ultrasonic measurement techniques currently available. The separation of the scattering component of the attenuation will require much improved circuitry and a full error analysis.

References

[1] J. D. Aindow, *Measurement of fluctuations in ultrasonic waves propagating in homogeneous media*, PhD Thesis, University of Surrey 1983.

[2] L. W. Anson, R. C. Chivers and J. Adach, *Ultrasonic radiation force devices with non-linear suspensions mechanical* (1987).

[3] L. W. Anson, R. C. Chivers, *A rugged strain gauge therapeutic ultrasound exposimeter*, J. Med. Eng. Tech., **6**, 150–152 (1892).

[4] V. N. Bindal, A. Kumar and R. C. Chivers, *On the float method of measuring ultrasonic output*, Acustica **53**, 219–223 1983.

[5] J. A. Campbell, R. C. Waag, *Measurement of calf liver ultrasonic differential and total cross sections*, J. Acoust. Soc. Am.. **75**, 603–611 (1984).

[6] A. A. Chevnenko, J. Kh. Yutchananov, *Two frequency echo recording method for differential tumour diagnosis*, Med. Tekhn., **3**, 40–41 (1971).

[7] R. C. Chivers, *Tissue characterisation*, Ultrasound Med. Biol., **7**, 1–20 (1981).

[8] S. Colombati, S. Petralia, *Absorbimento di ultrasuoni in tessuti animali*, Ric. Sci., **20**, 71–78 (1950).

[9] F. Dunn, P. D. Edmonds and W. J. Fry, *Absorption and dispersion of ultrasound in biological media*, in: Biological Engineering [Ed.] H. P. Schwan, pp. 214–251, McGraw Hill, New York 1969.

[10] K. Dussik, D. J. Fritch, *Measurements of articular tissue with ultrasound*, Am. J. Phys. Med., **37**, 160–165 (1958).

[11] M. J. Farmery, T. A. Whittingham, *A portable radiation force balance for use with diagnostic ultrasonic equipment*, Ultrasound Med. Biol., **3**, 373–379 (1978).

[12] W. J. Fry, R. B. Fry, *Determination of absolute sound levels and acoustic absorption coefficient by thermocouple probes–theory*, J. Acoust. Soc. Am., **26**, 294–310 (1954).

[13] F. E. Fyke, J. F. Greenleaf, *Continuous wave measurements of acoustic attenuation in an oil/polymer mixture*, Ultrasound Med. Biol., **5**, 87–89 (1979).

[14] P. A. Lewin, *Miniature piezoelectric polymer ultrasonic hydrophone probes*, Ultrasonics, **19**, 213–216 (1981).

[15] F. A. Lloyd, *Energy measurement*, in: Ultrasonic techniques in biology and medicine, [Ed.] B. Brown and D. Gordon pp. 46–86 Iliffe Books, London 1967.

[16] D. K. Nassiri, D. Nicholas, C. R. Hill, *Attenuation of ultrasound in skeletal muscle*, Ultrasonics, **17**, 230–232 (1979).

[17] D. K. Nassiri, C. R. Hill, *The differential and total bulk acoustic scattering cross sections of some human and animal tissues*, J. Acoust. Soc. Am., **79**, 2034–2047 (1986).

[18] K. J. PARKER, *The thermal pulse decay technique for measuring ultrasonic absorption coefficients*, J. Acoust. Soc. Am., **74,** 1356–1361 (1983).

[19] K. J. PARKER, *Ultrasonic attenuation and absorption in liver tissue*, Ultrasound Med. Biol., **9,** 363–369 (1983).

[20] R. C. PRESTON, D. R. BACON, A. J. LIVETT and K. RAJENDRAN, *PVDF membrane hydrophone performance properties and their relevance to the measurement of the acoustic output of medical equipment*, J. Phys., **E16,** 786–796 (1983).

[21] S. REANTRAGOON, R. C. CHIVERS, *Calorimetric assessment of propagation parameters, exposure and dose rate*, in: Physics in Medical Ultrasound, [Ed.] K. Martin and D. H. Evans IPSM, London 1987.

[22] S. REANTRAGOON, R. C. CHIVERS, *A procedure for cutting soft tissue speciments of regular shape*, Ultrasound Med. Biol., **13,** 364–367 L (1987).

[23] J. A. ROONEY, *Determination of acoustic power output in the microwatt-milliwatt range*, Ultrasound Med. Biol., **1,** 1–4 (1973).

[24] A. SHITZER, *Studies of heat transfer in animals*, in: Topics in transport phenomena, [Ed.] C. Gutfinger, Halsted Press 1975.

[25] G. R. TORR, D. J. WATMOUGH, *A constant flow calorimeter for the measurement of acoustic power at megahertz frequencies*, Phys. Med. Biol., **22,** 444–450 (1977).

[26] P. N. T. WELLS, *Biomedical ultrasonics*, Academic Press, London 1977.

[27] P. N. T. WELLS, M. A. BULLEN, D. M. FOLLETT, H. F. FREUNDLICH and J. A. JAMES, *The dosimetry of small ultrasonic beams*, Ultrasonics, **1,** 106–110 (1963).

[28] J. K. ZIENIUK, B. EVANS, *The influence of thermal parameters on making ultrasonic power measurements by a calorimeter method*, Acustica, **25,** 47–52 (1971).

[29] J. K. ZIENIUK, R. C. CHIVERS, *Measurement of ultrasonic exposure with radiation force and thermal methods*, Ultrasonics, **14,** 161–172 (1976).

Received October 27, 1987.